CTP 2.5 E

Width: 5,2 mm

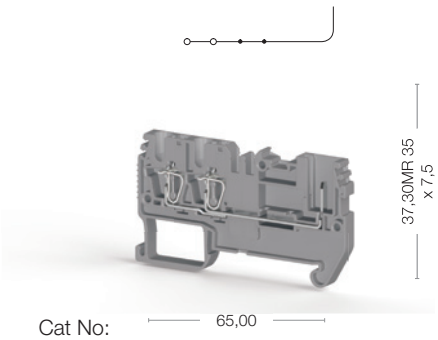

Cat No:

310 139
310 130
310 131

Voltage, V ~	Current, A	Cross-Section
500	24	2,5 mm²
300	20	AWG 28-12

0,08 - 4 mm²
0,14 - 2,5 mm²
0,5 mm²
28-12
8-10 mm

Type	Order No	Qty.
NPP/CTP 2,5	451 089	50

Type	Order No	Qty.
APP/CTP 2,5E	464 039	50

Type	Order No	Qty.

Type	Order No	Qty.
CS 2,5 / 2	470 102	25
CS 2,5 / 3	470 103	20
CS 2,5 / 4	470 104	15
CS 2,5 / 5	470 105	10
CS 2,5 / 10	470 109	5
CS 2,5 / 20	470 170	10

6/3
1/A3
IP20/NA
D-NS 5,2x6, SLF-P1 W

50

CTP 2.5 EA

Width: 5,2 mm

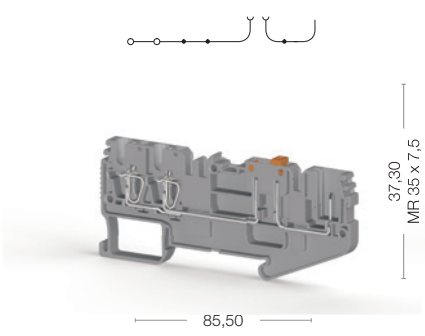

Cat No:

310 159

Voltage, V ~	Current, A	Cross-Section
400	20	2,5 mm²
300	20	AWG 28-12

0,08 - 4 mm²
0,14 - 2,5 mm²
0,5 mm²
28-12
8-10 mm

Type	Order No	Qty.
NPP/CTP 2,5 C	451 099	50

Type	Order No	Qty.
APP/CTP 2,5C	464 049	50

Type	Order No	Qty.

Type	Order No	Qty.
CS 2,5 / 2	470 102	25
CS 2,5 / 3	470 103	20
CS 2,5 / 4	470 104	15
CS 2,5 / 5	470 105	10
CS 2,5 / 10	470 109	5
CS 2,5 / 20	470 170	10

6/3
1/A3
IP20/NA
D-NS 5,2x6, SLF-P1 W

50

CTP 2.5 C

Width: 5,2 mm

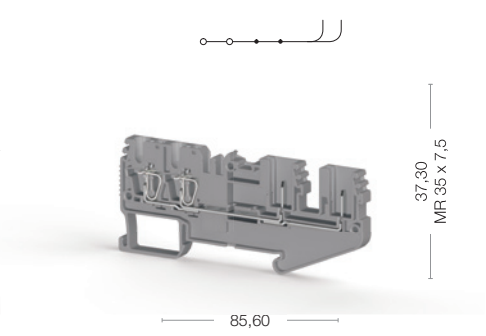

Cat No:

310 149

Voltage, V ~	Current, A	Cross-Section
500	24	2,5 mm²
300	20	AWG 28-12

0,08 - 4 mm²
0,14 - 2,5 mm²
0,5 mm²
28-12
8-10 mm

Type	Order No	Qty.
NPP/CTP 2,5 C	451 099	50

Type	Order No	Qty.
APP/CTP 2,5C	464 049	50

Type	Order No	Qty.

Type	Order No	Qty.
CS 2,5 / 2	470 102	25
CS 2,5 / 3	470 103	20
CS 2,5 / 4	470 104	15
CS 2,5 / 5	470 105	10
CS 2,5 / 10	470 109	5
CS 2,5 / 20	470 170	10

6/3
1/A3
IP20/NA
D-NS 5,2x6, SLF-P1 W

50